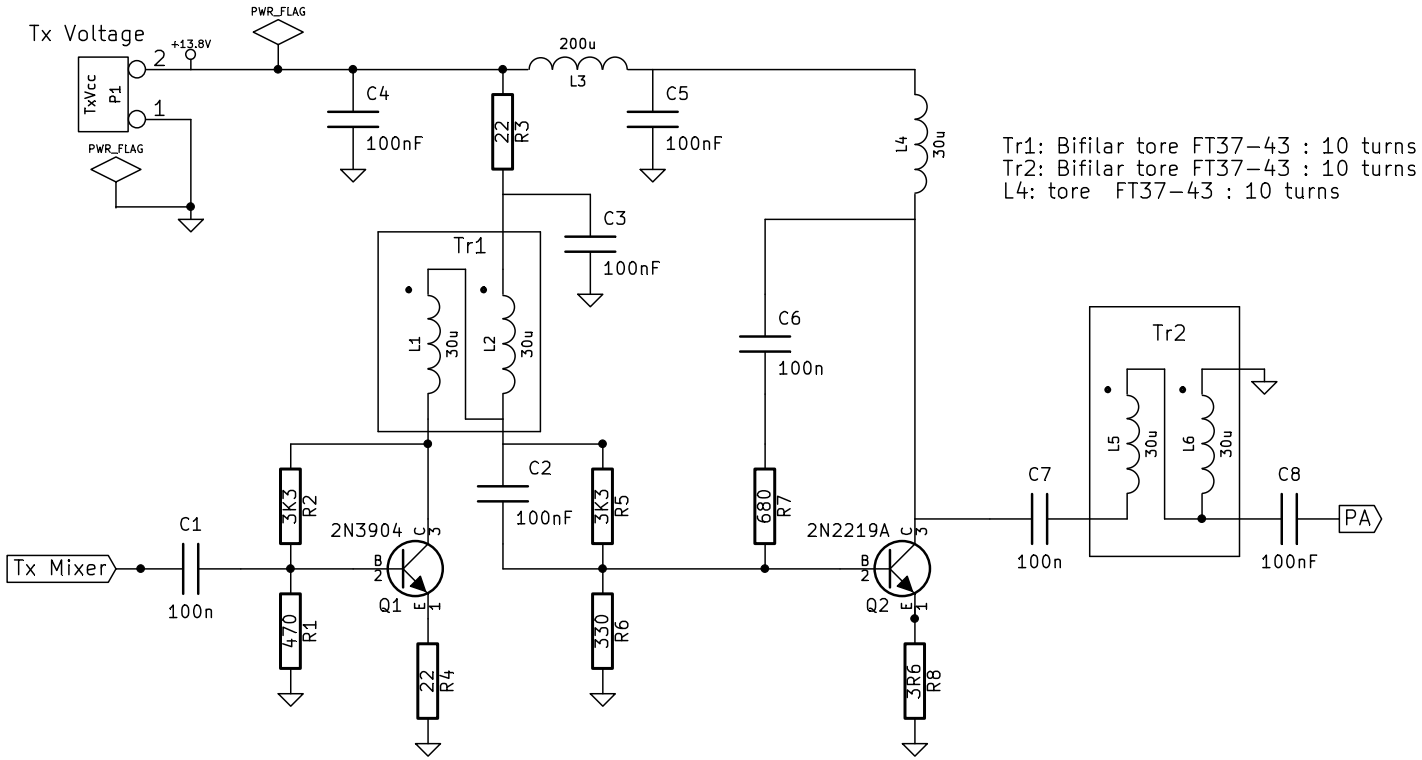

File: tcw20PADriver.sch		
Sheet: /		
Title: Transceiver CW 20 m – PA Driver – Version 1 16/03/2013 13:40		
Size: User	Date: 13 may 2013	**Rev: 1.0**
KiCad E.D.A. eeschema (2010-05-05 BZR 2356)-stable		Id: 1/1